ECOBATEnergy

One-stop Battery Energy Storage Solutions

User Manual

LiFePO4 Battery

ECOBAT Energy Residential Battery

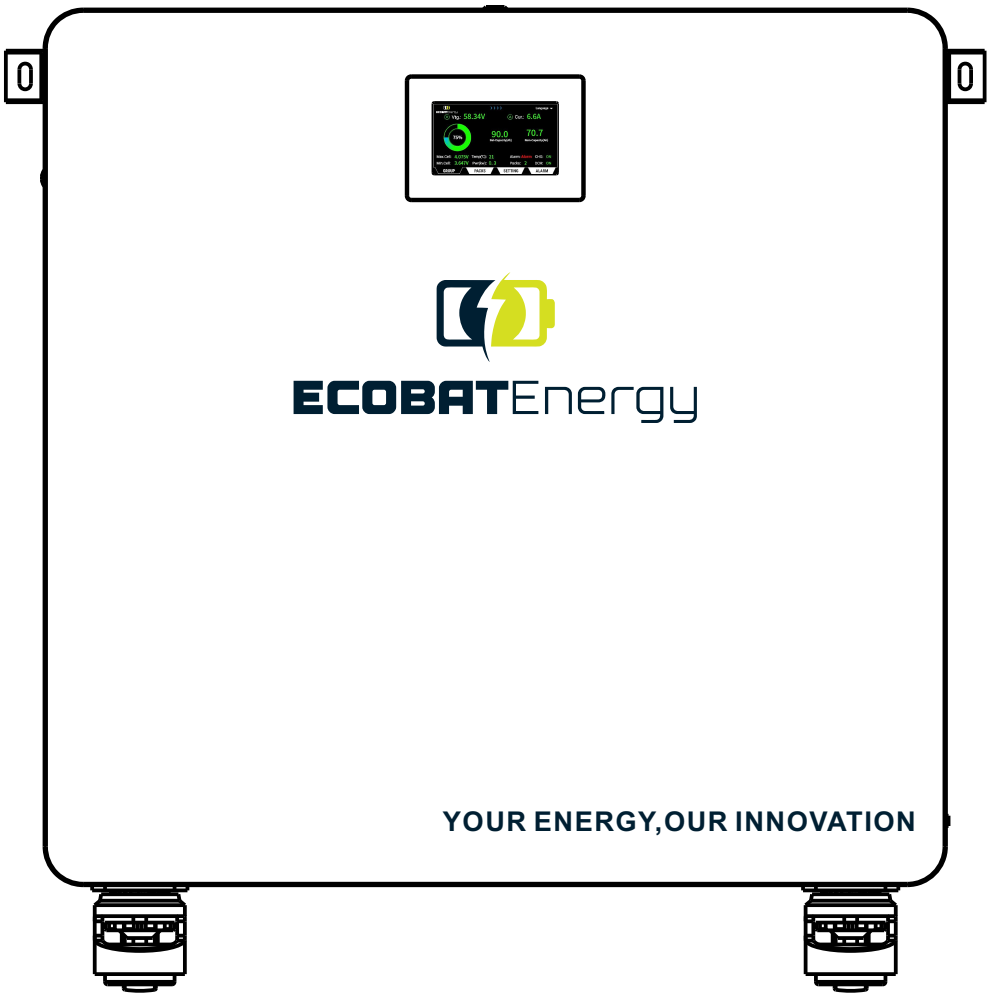

Table of Contents

Overview 1
- Scope 1
- Intended Audience 1
- Manual Usage 1

Product Introduction 1
- Introduction 1

Safety Instructions 2
- Labeling Explanation 2
- Installation Tools 2

Precautions 3
- Manual Storage 3
- Label Protection 3
- Safety Warning Labels 3
- Personnel Requirements 3
- Power-On Measurement 4
- Measuring Instruments 4
- Maintenance and Inspection 4

Overview of Main Components 5

Product Introduction 6
- Overview 6
- Advantages 6

Product Appearance 7
- Product Model 7
- Port Panel 8

Principle and Structure 9
- Operating Principle 9
- Connection Structure 9

Battery Installation and Wiring 10
- Tool Preparation for Installation 10
- Installation Preparation 10
- Installation Notes 10
- Installation Steps 11
- Electrical Connection 12
- Parallel Wiring: 13

Debugging 14
- RS485 & CAN Port Definition 14
- Upper Computer Software Operation Guide 15
- ADS DIP Switch Definitions 18
- Battery Parallel Connection DIP Switch Diagram 19
- Power-On Sequence 20
- Common Issues and Solutions 20
- Inverter Matching Information 21

Maintenance 22

Overview

◆ Scope

This user manual provides information, operating instructions, and maintenance guidelines for the ECOBAT Energy low-voltage residential energy storage battery series.
The ECOBAT Energy residential energy storage series is a lithium battery system developed by ECOBAT Energy designed to be compatible with various inverter brands available in the market.

◆ Intended Audience

This manual is intended for professional technical personnel involved in the installation, operation, and maintenance of lithium batteries, as well as end-users seeking technical information.

◆ Manual Usage

1.Before using the product, carefully review this user manual and keep it in a readily accessible location.
2.All information in this user manual, including images and symbols, is proprietary to ECOBAT Energy. Unauthorized use of any part or all of the content is strictly prohibited for individuals outside the company.
3.Considering the potential for updates and corrections to the manual content, users are advised to use the provided documentation as a reference. For the latest user manual, please refer to the product documentation provided or contact customer service through the official website.

Product Introduction

◆ Introduction

1.The ECOBAT Energy residential energy storage series is a battery module developed by ECOBAT Energy for low-voltage lithium battery systems, primarily applied in the field of residential energy storage. It can achieve high-precision multi-cell voltage and temperature acquisition.
2.The module adopts a passive balancing method, improving the overall lifespan of the battery pack.
3.The module features external communication interfaces using CAN, RS485,and dry contact communication methods, allowing communication in parallel for up to 16 batteries.
4.Embedded BMS system effectively monitors phenomena such as over-temperature, over-voltage, and over-current, reducing the risk of battery damage or even fire,ensuring the safety of life and property.
5.This manual introduces the types, sizes, performance,technical characteristics, warnings and precautions of lithium battery systems. This specification is only applicable to the battery systems provided by ECOBAT Energy.

Safety Instructions

◆ Labeling Explanation

To ensure user safety during product use, relevant labeling information with appropriate symbols is provided in this manual. The following lists symbols that may be used in this manual, so please read carefully.

Icon	Description
	Signifies a low-level potential hazard. Failure to avoid may result in minor or moderate injury to personnel.
	Indicates the presence of high voltage inside the battery module. Touching may lead to electric shock hazards.
	This is the ground protection port (PE). It should be securely grounded to ensure the safety of operating personnel.

◆ Installation Tools

Prior to installation, prepare the following tools:

Category	Description		
General Tools	Multimeter	Protective gloves	Insulated safety shoes
	Protective clothing	Safety goggles	Antistatic wrist strap
Installation Tools	Electric screwdriver	Socket wrench	Wire stripper
	Phillips screwdriver (M4/M6)	Electric drill	Hammer

Precautions

◆ Manual Storage

1.This manual covers crucial information for the ECOBAT Energy Home Energy Storage Series. Prior to operating the product, carefully read this manual as it provides essential assistance in acquainting you with the product.
2.Store this manual securely for the convenience of relevant installation and maintenance personnel to refer to during operations.
3.Strictly follow the descriptions in this manual when operating the ECOBAT Energy Home Energy Storage Series to avoid equipment damage, injuries, property loss, and other potential issues.

◆ Label Protection

1.Warning labels on the SWA Energy Home Energy Storage Series contain crucial safety operation information. It is strictly prohibited to intentionally tear or damage them!
2.The product has a nameplate on the casing, providing essential parameter information. It is strictly prohibited to intentionally tear or damage it !

◆ Safety Warning Labels

When conducting installation, routine maintenance,inspections,etc., on the ECOBAT Energy Home Energy Storage Series, to prevent unauthorized individuals from approaching, engaging in improper operations,or accidents, adhere to the following conventions:
1.Erect clear signage at the switch locations of the ECOBAT Energy products to prevent accidents caused by accidental closing.
2.Set warning signs or establish safety warning tape near the operating area to prevent unrelated personnel from approaching.
3.After maintenance or inspection, conduct a thorough on-site safety check.

◆ Personnel Requirements

1.Only personnel with relevant professional qualifications are allowed to perform various operations on this product.
2.Operating personnel should be thoroughly familiar with the composition and working principles of the entire ECOBAT Energy Home Energy Storage Series system.
3.Operating personnel should be fully acquainted with the "User Manual" for this product.

Precautions

◆ Power-On Measurement

Danger

After the energy storage battery is installed, there is a high voltage present, and accidental contact with the positive and negative terminals may result in electric shock injuries. Therefore, when conducting power-on measurements, attention should be paid to the following:

1.Take necessary insulation protection measures (such as wearing insulated gloves).
2.Accompanying personnel must be present to ensure personal safety.

◆ Measuring Instruments

Warning

When performing electrical connections and trial operations on the energy storage backup battery, and to ensure that electrical parameters meet requirements, relevant electrical measuring equipment such as multimeters, power meters, etc., should be used. Note the following:

1.Use measuring equipment with a suitable range that conforms to on-site working conditions.
2.Ensure the correct and standardized electrical connections of the instruments to avoid dangers such as electric arcs.

◆ Maintenance and Inspection

Warning

When both the energy storage battery and the inverter are turned off, and electrical connections are confirmed to be disconnected, maintenance or inspection operations can be carried out on the energy storage battery cabinet. Pay attention to the following:

1.Ensure that the energy storage battery will not be accidentally re-energized.
2.Use a multimeter to ensure that the energy storage battery is completely de-energized.
3.For parts near potentially live components during operations, use insulating materials for insulation covering or grounding.
4.It is strictly prohibited to perform maintenance or inspection operations on live equipment!

When performing maintenance or inspection on equipment, it must be ensured that at least two personnel are present at the site. Maintenance operations can only be carried out after the equipment is safely de-energized, fully charged, or discharged.

Overview of Main Components

◆ Product configuration list

No.	Image	Name	Qty	No.	Image	Name	Qty
1	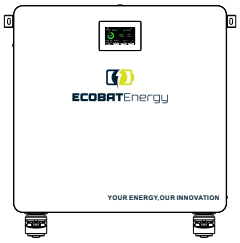	Battery	1	2		Communication Cable	2
3		Orange-Positive Power Cable	1	4		Expansion Bolt	9
5		Black-negative Power Cable	1	6	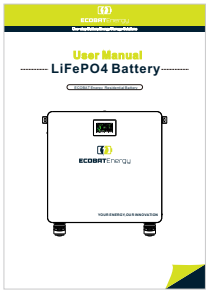	Product User Manual	1
7	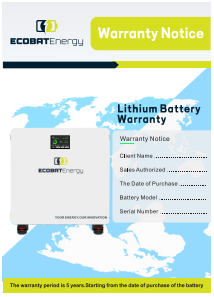	Warranty Card	1				

The product configuration list is subject to change without prior notice.

Product Introduction

◆ Overview

The ECOBAT Energy household energy storage series lithium battery module integrates ECOBAT Energy high-capacity, high-safety lithium iron phosphate battery cells. It adopts a stacked design with advantages in footprint and vertical space ultilization.The module incorporates a high-precision Battery Management System (BMS) unit, monitoring and collecting real-time data on voltage
and temperature inside the module. This enables intelligent temperature control at the cell level and smart cell balancing, enhancing system efficiency and battery cycle life. The module features a shock-resistant structure within a cold-rolled sheet metal shell for high safety and reliability, meeting household standards. Additionally, the module is designed for high stability and disturbance resistance, ensuring the safe and reliable operation ofthe battery system.

◆ Advantages

- The positive electrode material of the battery is lithium iron phosphate ($LiFePO_4$) material. which has good safety performance, has a cycle life of more than 8,000 times.
- The high-performance intelligent management system is adopted to realize comprehensive state control of battery charging, discharging, floating charging and hibernation, and multi-level protection is set for voltage, current, temperature, etc., so that the battery is always in an ideal state.
- It has a comprehensive monitoring system to monitor the voltage, current, temperature, capacity and working status of the battery.
- The system adopts an intelligent design method to meet the four remote control standards of the national standard: telemetry, remote signaling, remote control, and
- remote adjustment.
  Built-in intelligent balance module to ensure the capacity consistency of the battery pack
- during long-term use and prolong the service life.
  The control panel includes status display and alarm devices, which can visually see the
- working status and alarm information of the battery.
  The system has its own intelligent thermal management device, which can work in a wide temperature range.

Product Appearance

Product Model

The technical parameters of LiFePO4 Battery Energy Storage System are shown in Table 1 below:

Items	51.2V440Ah
Ingress Rating	IP21
Rated Voltage (V)	51.2
Nominal capacity (Ah)	440Ah
Energy (kWh)	22.53

Control Panel

LiFePO4 Battery Energy Storage System adopts the same control panel structure as Figure 2,

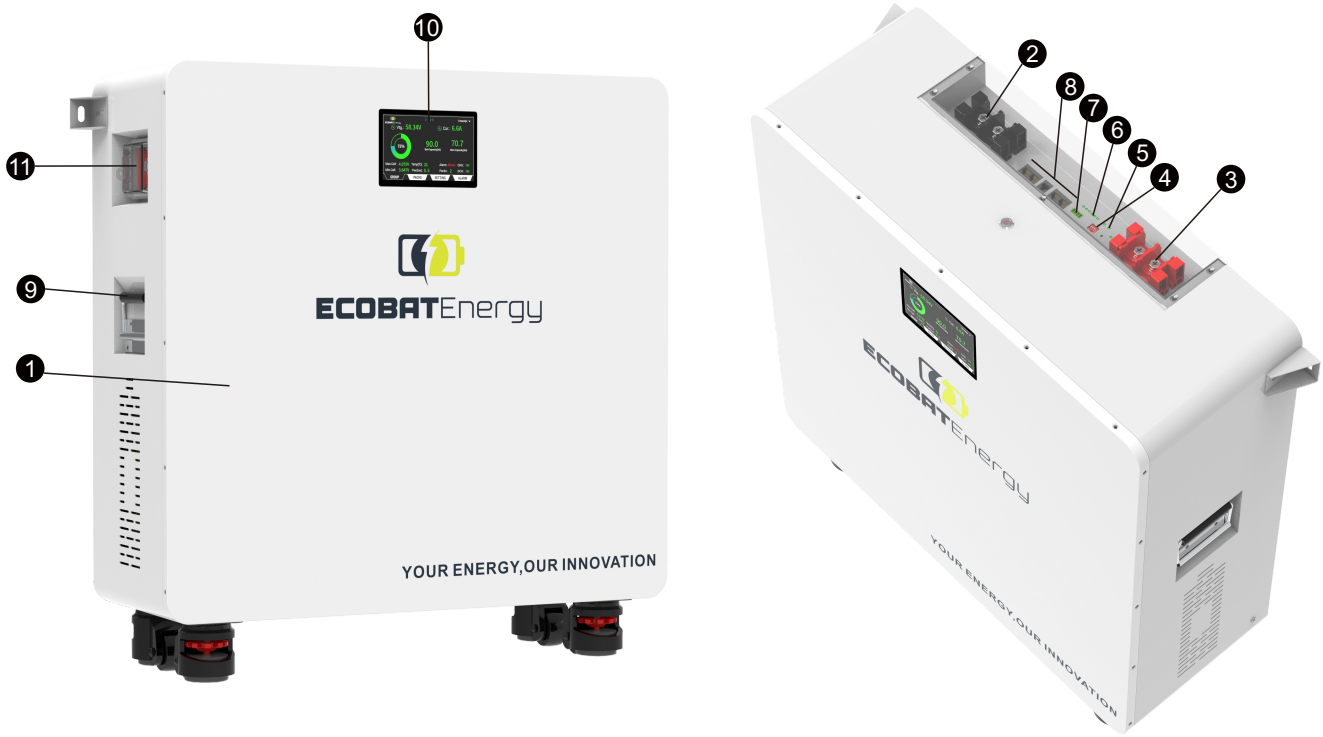

1 Metal Case (SPCC)
2 Positive Terminal
3 Negative Terminal
4 RST Button
5 RUN & ALARM Lighting
6 SOC Display Lighting
7 Cable Entry Port
8 Communication Port
9 Handle
10 LCD Display Screen
11 DC Breaker

Figure 2 Control Panel Illustration (Reference Picture)

Remark: All LiFePO4 battery energy storage system with wall mounted type, different panel place, LCD display shown in battery pack have same functions.

Port Panel

No.	Name	Function	Notes
1	Metal Case (SPCC)	Painted metal casing	
2	Positive Terminal Port (+)	Battery Positive Output	
3	Negative Terminal Port (-)	Battery Negative Output	
4	Wheel (x4)	Used for short-distance movement and positioning of the battery.	Move only on flat surfaces. Lock the casters after positioning.
5	Operation Light (RUN) Alarm Light (ALM)	Battery Operation Indicator Light Battery Alarm Indicator Light	
6	Capacity Light (CAPACITY)	Battery Capacity Indicator Light	
7	Cable Entry Port	Used for routing the power cable and communication cable into the battery.	Ensure proper sealing after cable installation to maintain the Ip65 protection rating.
8	RS485A & CAN	485 Communication Interface CAN Communication Interface	Communication with inverter via RS485 Communication with inverter via CAN
8	RS232	1.Monitor batteries and modify parameters. 2.Perform software upgrades.	
8	RS485B	Communication between batteries	Functions are the same, no distinction between left and right.
9	Metal Handle	Battery Metal Handle	
10	Wall-Mount Bracket	Used to secure the battery to the wall and prevent tipping.	Install firmly with appropriate fasteners according to the wall type.
11	DC Circuit Breaker	Used to switch the battery output on or off and provide overcurrent protection.	Turn off the circuit breaker before installation, wiring, or maintenance.

Principle and Structure

◆ Operating Principle

Working principle for Residential LiFePO4 Battery Energy Storage System: Connect battery pack in parallel to the DC output end of the inverter of the energy storage device. When the mains power supply is normal, the inverter module works normally to supply power to the equipment (the load in the figure) and charge the battery pack; when the utility power and photovoltaic power are cut off, the battery pack provides uninterrupted power supply to the inverter to ensure the normal operation of household electricity; When power is turned on again, the battery pack is charged while power is restored to the household loads.

◆ Connection Structure

The connection diagram ofresidential LiFePO4 battery energy storage system Is shown in Figure 1 below:

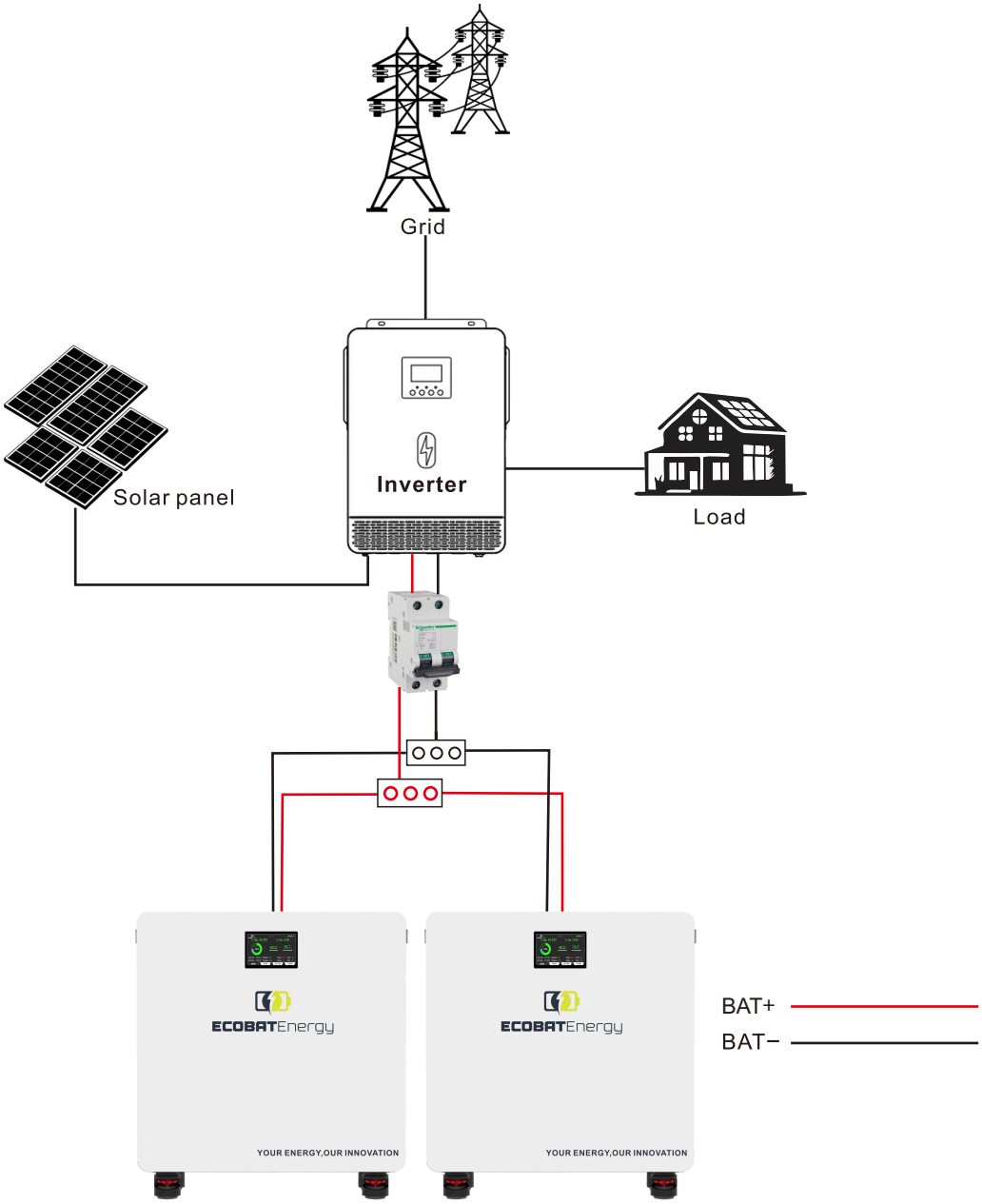

Figure 1 Operation Principle Diagram of Battery System

Battery Installation and Wiring

◆ Tool Preparation for Installation

Tools Required: Electric drill, hammer, wrench, M8*60 expansion bolt, Phillips screwdriver, multimeter, insulated gloves, Ethernet cable, power cable.

◆ Installation Preparation

Safety Regulations

The installation, operation and maintenance of LiFePO4 Battery Energy Storage System should only be carried out by trained and qualified professionals. Before installation and use, please read the safety precautions and related operating procedures of this product carefully. The installation process must strictly abide by the following safety regulations and local safety regulations, otherwise it may cause personal injury or product damage.

- Please ensure that the inverter connected to the battery is a qualified power system;
- When installing the battery, please ensure that the power system is turned off and the battery pack is turned off;
- All power-saving cables must have corresponding insulation measures, and it is strictly forbidden to expose the power cord;
- Ensure that the battery and the power system are reliably grounded during installation.

◆ Installation Notes

- When begin to install the battery system, you should pay attention to the following matters:
- Installation space and load bearing. Make sure that there are sufficient fixed components to install the battery system, and to ensure that the battery mounting bracket or the cabinet be strong enough to bear the weight.
- Cable specifications. To ensure that the use of the connection of the power supply line can meet the maximum current requirements of equipment operation.
- Project layout. Ensure the whole construction process of power equipment, batteries and other reasonable layout.
- Wiring layout. Ensure that the wiring reasonable, orderly; and consider the moisture-proof, corrosion prevention.
- The whole installation process should wear anti-static wristband.
- The installation site should be at least two or more peoples to operate.
- Please ensure the installation site safe before installation.

◆ Installation Steps

- Select a suitable solid wall with a thickness greater than 150mm;
- Refer to the fixing distance of the mounting bracket bolts, and mark the hole position on the wall;
- Drill 9 holes according to the hole position, the depth is ⩾80mm;
- Mount the M8 expansion bolts in the upper holes and screw on the nuts;

◆ Installation Steps

- Fix the mounting bracket on the wall with expansion bolts;
- Under the condition of keeping the battery vertical, raise the battery to a position slightly higher than the mounting bracket, and hang the battery on the mounting bracket.

Step No.	Name	Definition
1	Turn off power supply	The system should be powered off, to ensure that there is no electric in installation process
2	Mechanical installation	1. Mounting lugs installation
		2. Battery fixed installation
3	Electrical installation	1. Grounding cable
		2. Power cable installation
		3. Connecting equipment installation
		4. Communication cable installation
4	Electrical commissioning	Power system commissioning

Step1.Interruption Of Power Supply

Before installation, please ensure the battery is powered off, at the same time, shutdown the equipment which need to connect to the battery.

Step2.Preparation before Installation

1.Installation of the mounting bracket. The device is packaged with an attached mounting wall bracket. Before installing the battery, fix the mounting bracket on the wall to ensure that the installation is tight.

2.Fixed battery installation. Secure the battery module to the mounting bracket to ensure that the battery pack is securely installed.

3.Expansion bolt installation diagram.

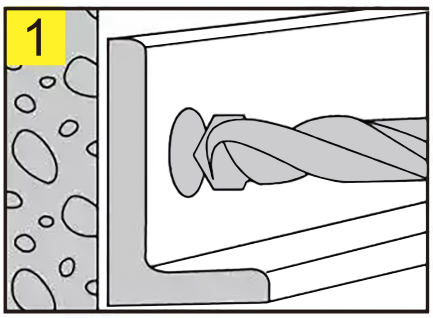

1.Drilling

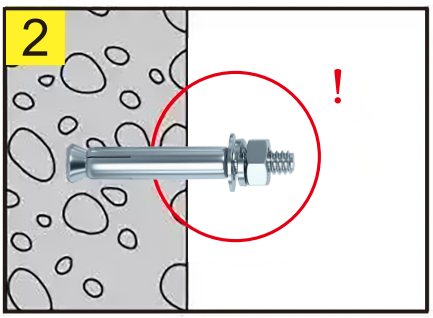

2.Driving anchor bolts

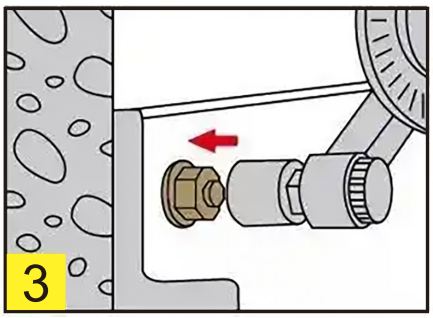

3.Tighten

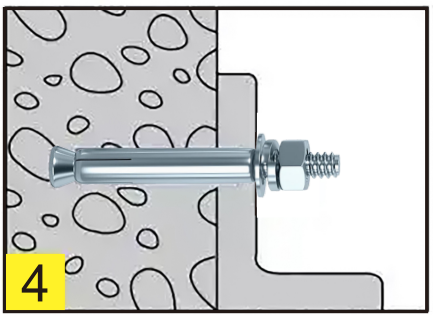

4.Installation Complete

NOTICE:

1. In order to avoid electric shock or other injuries, check whether the existing electronic plumbing installation is compliant before drilling.
2. The battery is heavy, please handle it with care, so as not to damage the product or injure the installer.

◆ Electrical Connection

Single Unit Wiring:

Step 1. Connect the positive and negative terminals of the battery to the positive and negative terminals of the inverter using the power cable.

Step 2. Complete the battery's grounding connection by using the ground wire.

Step 3. Connect the RS485A (or CAN) port of the battery to the RS485 (or CAN) communication port of the inverter using the communication cable.

Step 4. If used as a single unit, set the ADS dip switch to 1. Refer to section for dip switch rules.

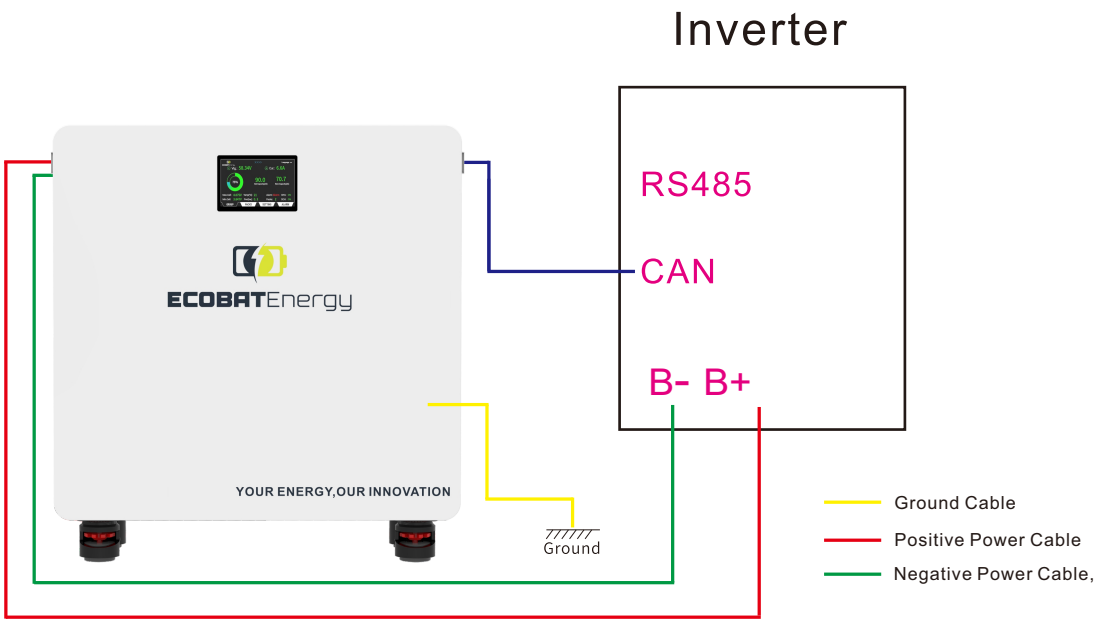

Parallel Wiring:

If multiple batteries are used in parallel, manually press the low-voltage switch (ON/OFF) first. Use a multimeter to check if the voltage of each battery is consistent. If consistent, turn off the batteries and proceed with cable connections, as shown in the schematic diagram (using two batteries in parallel as an example).

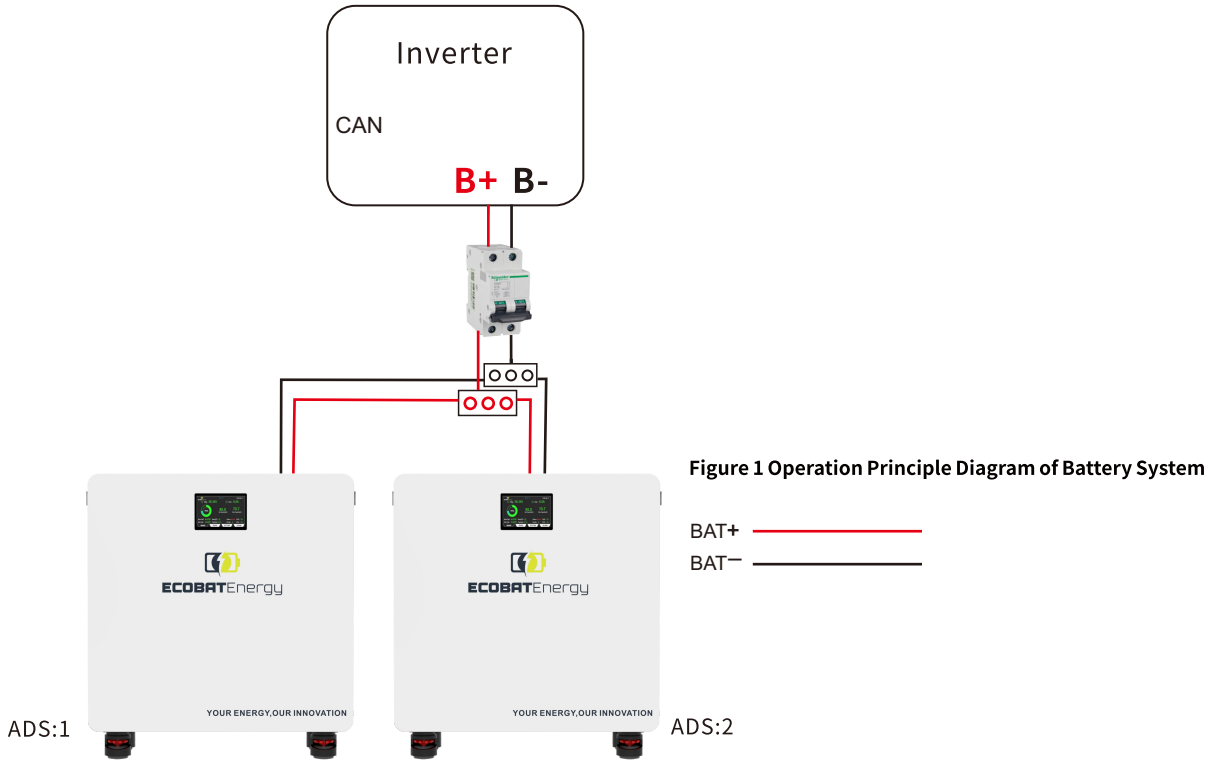

Figure 1 Operation Principle Diagram of Battery System

Step 1.Connect the positive terminal of the battery using the power cable, and then connect the negative terminal of the battery using the power cable.

Step 2.Connect the RS485B communication interface of adjacent batteries with communication cables (RS485B battery parallel ports have the same functionality and are not distinguished).

Step 3.Connect the ground wire to the grounding point for all batteries. There is a ground symbol in the lower-left corner of the battery; attach the ground wire terminal to this point.

Step 4.Use a standard Category 6 cable. Connect one end to the RS485A (or CAN) communication interface of the battery and the other end to the RS485 (or CAN) interface of the inverter (Note: the pin definition of the inverter communication should match that of the battery; refer to section for battery-to-inverter pin definitions).

Step 5.Connect the positive terminal (+) of the first battery to the positive terminal interface of the inverter using the power cable. Then, connect the negative terminal (-) of the last battery to the negative terminal interface of the inverter using the power cable.

NOTICE:

- The battery directly connected to the inverter via the communication cable is defined as the host. The host dip switch is set to 1 and needs to be switched before powering on.
- Define dip switches for other batteries sequentially from 2 to 15. Avoid duplicating dip switch settings to 1.

Manual

◆ 1.APP insrallation

Download the mobile app by scanning the QR code in the following image.

Figure 1 Mobile APP Link QR Code

2. (APP operation instructions)

2.1. (Equipment operation)

2.1.1. (Equipment Connection)

First, turn on the Bluetooth on your phone, then open the app as shown in Figure 2.

Click on the icon in the upper left corner to scan the device, wait for the scan to complete, and then click on the name of the device that needs to be connected, such as "JK - B1A24S". When connecting for the first time, the APP will prompt for a password. The default password for the device is "1234". After the device is connected, the APP will automatically record the password. There is no need to enter a password for the next connection. After opening the APP, click on the device in the device list to automatically connect. The password input interface is shown in Figure 3.

Figure 2 Device Scanning

Figure 3 Password Input

◆ 2.1.2.(Change password and name)

After connecting the device, click on the "Pen Type" icon on the right side of the device list to modify the device name and password.

The device name modification interface is shown in Figure 4. Please note that the device name only supports English or numbers, and does not support Chinese names or Chinese characters.

The password modification interface is shown in Figure 5. To change the device password, you must first enter the old password of the device. Only when the current password is correct can you enter the option for entering the new password. After entering the new password twice, click "OK" to complete the device password modification.

图 4 名称修改

Figure 4 Name modification

图 5 密码修改

Figure 5 Password modification

◆ 2.2. (Status View)

The real-time status interface is shown in Figure 6、7.

Figure 6 Real time status display

Figure 7 Real time status display

The real-time status page is divided into three areas.

Zone 1 in the figure is the comprehensive battery information column. The definitions of each parameter are as follows:

The running time represents the total running time from the first startup of the protection board to the present (unit: S).

2) (Charging)

Indicates the switch status of the current protection board charging MOS. When "on" is displayed, it indicates that the current protection board charging MOS is on and the battery is allowed to charge; When "off" is displayed, it indicates that the charging MOS of the current protection board is turned off and the battery is not allowed to charge.

3) (Discharge)

Indicates the switch status of the current protection board discharge MOS. When "on" is displayed, it indicates that the current protection board discharge MOS is open and the battery is allowed to discharge; When "off" is displayed, it indicates that the current protection board discharge MOS is turned off and the battery is not allowed to discharge.

4) (Precharge status (if supported))

Indicates the status of the current discharge precharge switch. When the displayed content is On, the discharge precharge switch is on, and the battery precharges the controller through the precharge switch and the precharge resistor. The precharge time is the value set in Discharge Precharge Time in Parameter Settings. After the precharge is complete, the protection board automatically turns on the discharge switch.

5) (Equilibrium)

Indicates the on/off state of the current protection board balance switch. When "on" is displayed, the protection board will automatically balance when the balance triggering condition is reached; When "off" is displayed, it indicates that the balance is off and the protection board will not balance the battery.

6) (Voltage)

Voltage area Displays the total voltage of the current battery in real time. The total voltage is the sum of voltage of all cells (unit: V).

7) (Current)

The current area displays the total current of the current battery in real-time. When the battery is charged, the current is positive, and when the battery is discharged, the current is negative (unit: A).

8) (Battery power)

Represents the total power output or input of the current battery, which is the product of the absolute value of the current battery voltage and battery current(unit: W).

9) (Individual average)

Indicates the average voltage of the current battery (unit: V).

10) (Battery capacity)

Indicates the actual battery capacity calculated by the high precision SOC of the current protection board (unit: AH).(This value needs to be updated after the battery has done a complete discharge and charge cycle)

11) (Maximum pressure difference)

The maximum pressure difference represents the difference between the highest cell voltage and the lowest cell voltage for the entire battery group (unit: V).

12) (Remaining power)

Remaining capacity Indicates the remaining capacity of the current battery (unit: AH).

13) (Balanced current)

When the protection board enables the balancing function and reaches the balancing condition, the balancing current display area displays the balancing current in real time (unit: A).

When balancing is in progress, the real-time status of the individual voltage display area, where blue represents the discharged battery and red represents the charged battery. The negative current of the balanced current indicates that the battery is discharging, with blue flashing. The positive current of the balanced current indicates that the battery is charging, with red flashing.

The protection board adopts active balancing technology, and the principle of balancing is to take electricity from high voltage cells, store it in the protection board, and then discharge it to low voltage cells.

14) (Residual electricity)

Represents the percentage of current battery power left.

15) (MOS temperature (power temperature))

Real time display of the current protection board power MOS temperature(unit: ℃).

16) (Battery temperature 1)

When temperature sensor 1 is not installed, "NA" is displayed. When temperature sensor 1 is installed, the temperature of temperature sensor 1 is displayed in real time(unit: ℃).

17) (Battery temperature 2)

When temperature sensor 2 is not installed, "NA" is displayed. When temperature sensor 2 is installed, the temperature of temperature sensor 2 is displayed in real time(unit: ℃).

18) (Battery temperature 3 (if supported))

When temperature sensor 3 is not installed, "NA" is displayed. When temperature sensor 3 is installed, the temperature of temperature sensor 3 is displayed in real time(unit: ℃).

19) (Battery temperature 4 (if supported))

When temperature sensor is not installed, "NA" is displayed. When temperature sensor 4 is installed, the temperature of temperature sensor 4 is displayed in real time(unit: ℃).

20) (Battery temperature 5 (if supported))

When temperature sensor 5 is not installed, "NA" is displayed. When temperature sensor 5 is installed, the temperature of temperature sensor 5 is displayed in real time(unit: ℃).

21) (Number of cycles)

The number of cycles indicates the ratio of the total discharge capacity to the actual battery capacity,in units of times.

22) (Cycle capacity)

Cycle capacity represents the cumulative discharge capacity of a battery(unit:AH).

23) (Battery voltage)

Current total battery voltage(unit:V).

24) (C-voltage (internal parameters))

The difference between the charger input voltage and the actual battery voltage(unit:V).

25) (Heating current (if supported))

Under the condition that the protection board supports heating, when the heating of the protection board is turned on, the current heating current is displayed in real time(unit:A).

26) (Heating status (if supported))

When the protection board supports heating, the current heating switch status of the protection board is displayed in real time. The displayed content is On or Off. When this parameter is enabled, it indicates that the protection plate is heating.

27) (ACC (if supported))

If the protection board supports ACC recognition function, the current status of ACC will be displayed here, with the displayed content as "on" or "off". When the protection board supports ACC recognition, the discharge output of the protection board can only be turned on when the ACC status is "on".

28) (Dedicated charger (if supported))

If the protection board supports the dedicated charger recognition function, the current status of the dedicated charger will be displayed here, with the display indicating "inserted" or "not inserted". In this case, the charging can only be turned on when the dedicated charger status is "inserted".

29) (Charger (if supported))

If the protection board supports the charger recognition function, the current status of the charger will be displayed here, with the display indicating "inserted" or "not inserted". In this case, the charging can only be turned on when the charger status is "inserted".

30) (SOH valuation)

Indicates the estimated battery health status of the current protection board.

31) (Charge current correction (internal parameters))

Used as charging current calibration.

32) (Discharge current correction)

Used for discharge current calibration

33) (Charge voltage (internal parameters))

Charging current Sensor voltage (unit: V).

34) (Discharge voltage (internal parameter))

Discharge current Sensor voltage (unit: V).

35) (Emergency time)

Under the condition of turning on the emergency switch, the remaining emergency time is displayed here (unit: S).

36) (Voltage correction (internal parameter))

Battery voltage correction factor.

37) (Equalizing PWM(internal parameter))

Control balanced constant current charging current.

38) (Equalizing PWM(internal parameter))

Control balanced constant discharge current.

39) (Reset source(internal parameter))

Indicates what causes the reset of the protection board.

40) (MCU model(internal parameter))

Indicates the processor model of the protection board.(Note: 0 is STM32,1 is HK32, 2 is MM32M0,3 is GD32, 4 is MM32M3,5 is WCH32,6 is AMP32)

41) (System beat)

Indicates the system beat time (unit: S).

42) (PVD trigger (internal parameters))

Indicates the timestamp triggered by PVD(unit: S).

43) (Detailed journal)

Indicates the number of detailed logs recorded by the current protection board.

44) (Hibernation time)

Indicates the time when the protection board enters the hibernation state(unit: S).

45) (Current limiting module (if supported))

If the protection board supports the identification function of the current traffic limiting module, the status of the current traffic limiting module is On or Off.

Region 2 in Figure 7 is the voltage region of a single unit. The voltage data of each cell in the battery pack is displayed in real time, where red indicates the cell with the lowest voltage and blue indicates the cell with the highest voltage.

Area 3 in Figure 7 is the resistance area of the equalizing line. The balance line resistance is the balance line resistance obtained by the self-test of the protection board. The value is only a preliminary calculation to prevent incorrect connection or poor contact. When the balance line resistance exceeds a certain value, the yellow color is displayed, and the balance cannot be started.

2.4.(Operating environment and reliability parameters)

(Parameter)	(Test environment)	(Min)	(Typ)	(Max)	(Unit)
(Operating temperature)	(At 12V voltage, the humidity is 60%)	-20	-	70	℃
(Storage temperature)	-	-30	-	80	℃
(Operating humidity)	25℃	10%	60%	90%	RH

◆ 3. (Operation instruction)

3. 1. APP operation Instructions

Open the JiKong BMS APP, and change the "Serial port 3 protocol" to "015-JK BMS Pbxx SERIES LCD Protocol V1.0" on the "Parameter Setting" page.

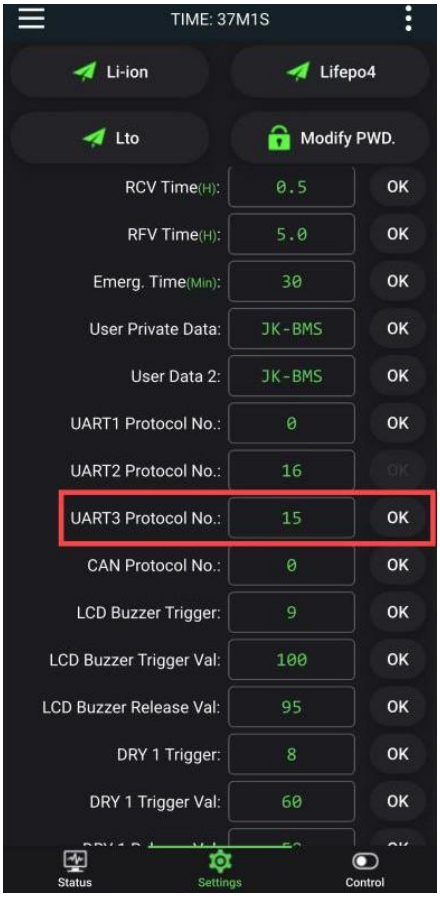

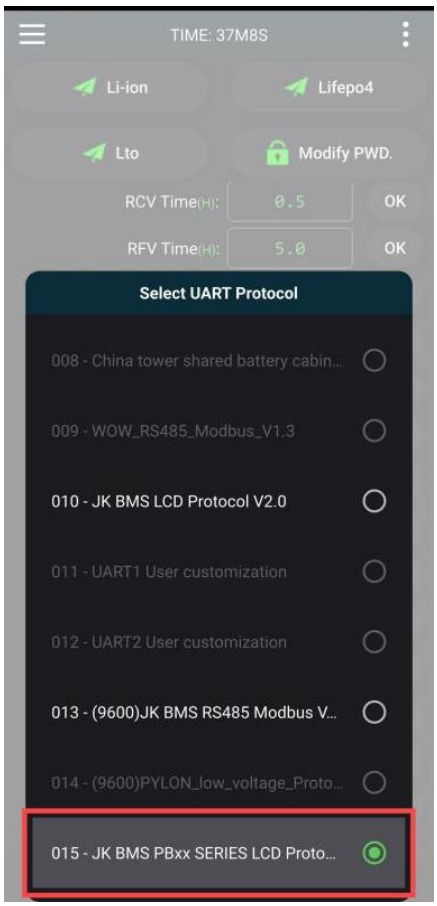

◆ 3.2.(Display interface operation description)

◆ 3.1. (Battery interface)

The battery string screen displays the current voltage and current of the battery string, the number of online battery packs, the charging and discharging status of the entire battery string, and the highest and lowest cell temperature.

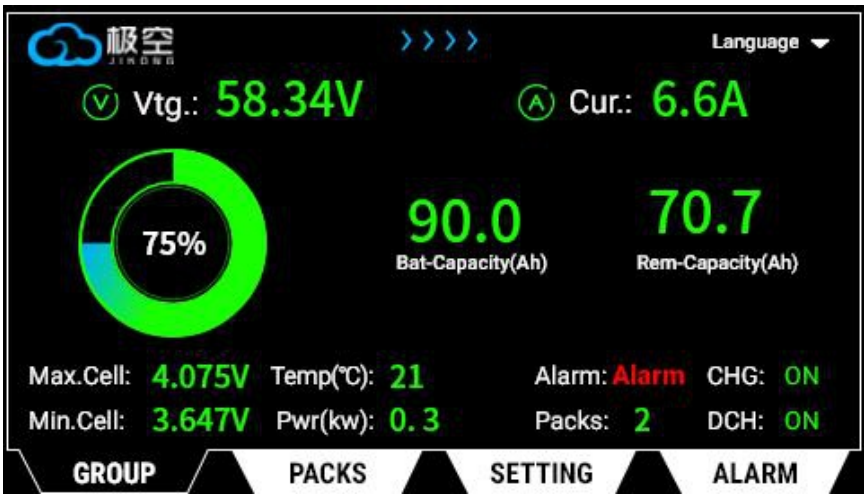

◆ 3.2.2.(Battery pack interface)

In parallel mode, by selecting the battery pack, you can display different battery pack design capacity, remaining capacity, charging and discharging status of each battery pack, voltage of each cell and other parameters, up to 16 battery packs can be displayed.

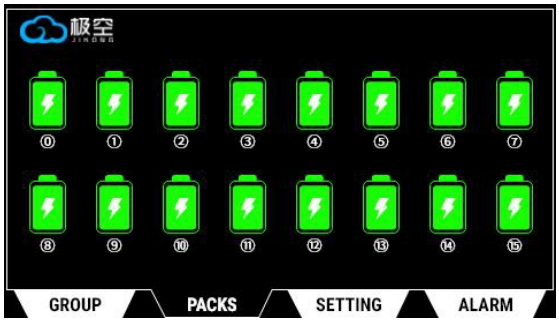

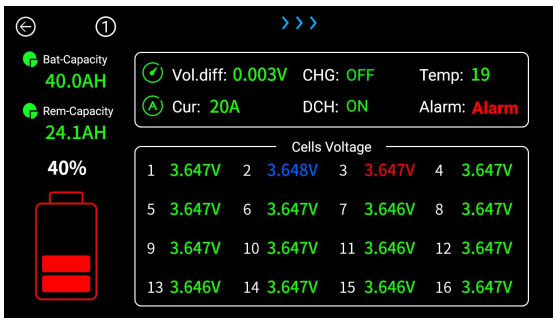

◆ 3.2.3.(Protocol selection interface)

Through protocol selection, you CAN select the corresponding 485 protocol and CAN protocol, so as to select the appropriate communication protocol for communication.

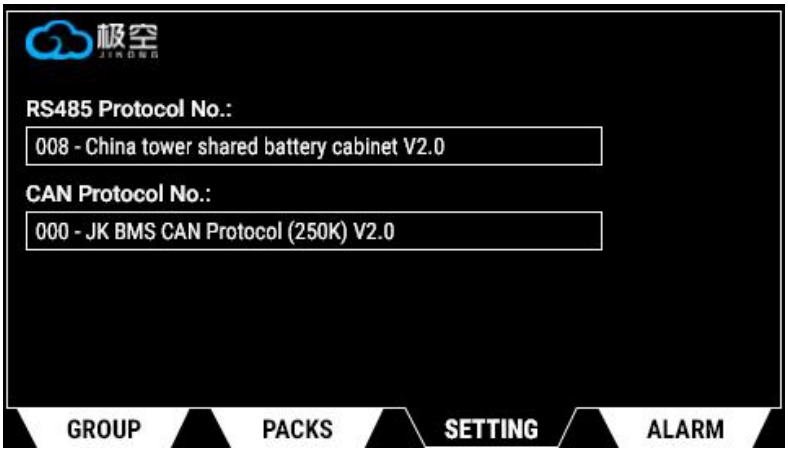

(485 Protocol Selection)

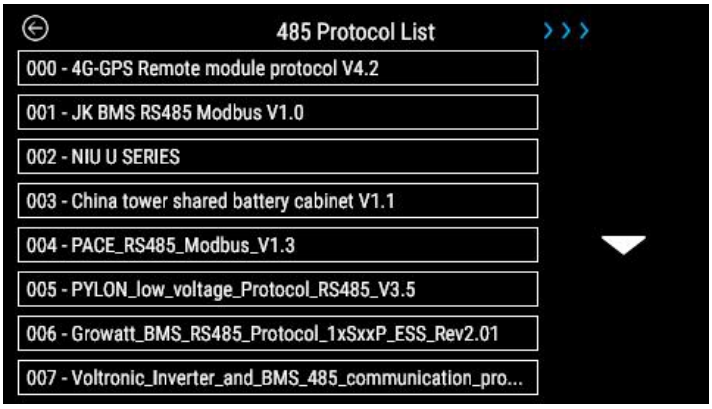

(CAN Protocol Selection)

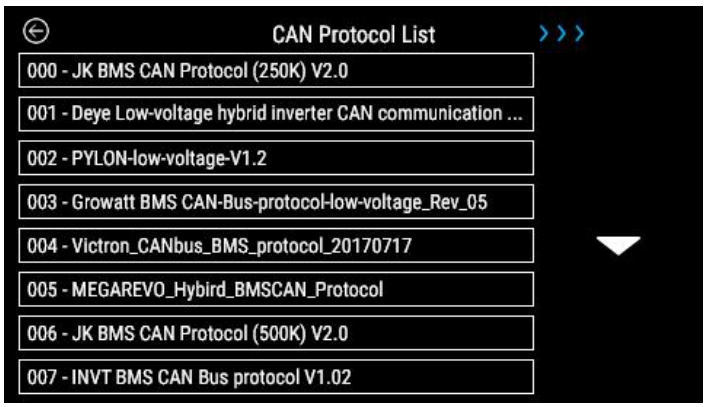

Maintenance

1.Do not immerse the battery in water. When not in use, store it in a cool and dry environment.
2.Do not throw the battery into the fire or heat it externally to avoid explosion or other hazards.
3.Do not invert the positive and negative poles of the battery. Never connect the battery directly to a power outlet, and prohibit short-circuiting the positive and negative poles.
4.Do not mix batteries from different manufacturers, different kinds, types, or different ages.
5.Do not use batteries that show signs of heating, swelling, deformation,or leakage in charging or discharging devices.
6.Prohibit piercing the battery with nails or other sharp objects, as well as throwing, stepping on, hitting, or impacting the battery.
7.Prohibit disassembling or dismantling the battery and its components. Any damage caused by unauthorized disassembly or repair will not be the responsibility of our company.
8.The battery undergoes strict inspection before leaving the factory. If customers find signs of heating, swelling, or unusual odors, do not use it and return it to the factory immediately.
9.For long-term storage, to ensure optimal battery performance, perform a charge-discharge cycle every three months and ensure a storage charge of 40%~60%.
10. Use the battery within the specified temperature range as stated in the specification.
11. Follow the specified power-up sequence for both the battery and the inverter.
12. If the battery is left unused for more than 3 months, it needs manual charging periodically to prevent complete discharge.

NOTE:

- In case of specific technical issues or situations not mentioned above, please contact technical support promptly.